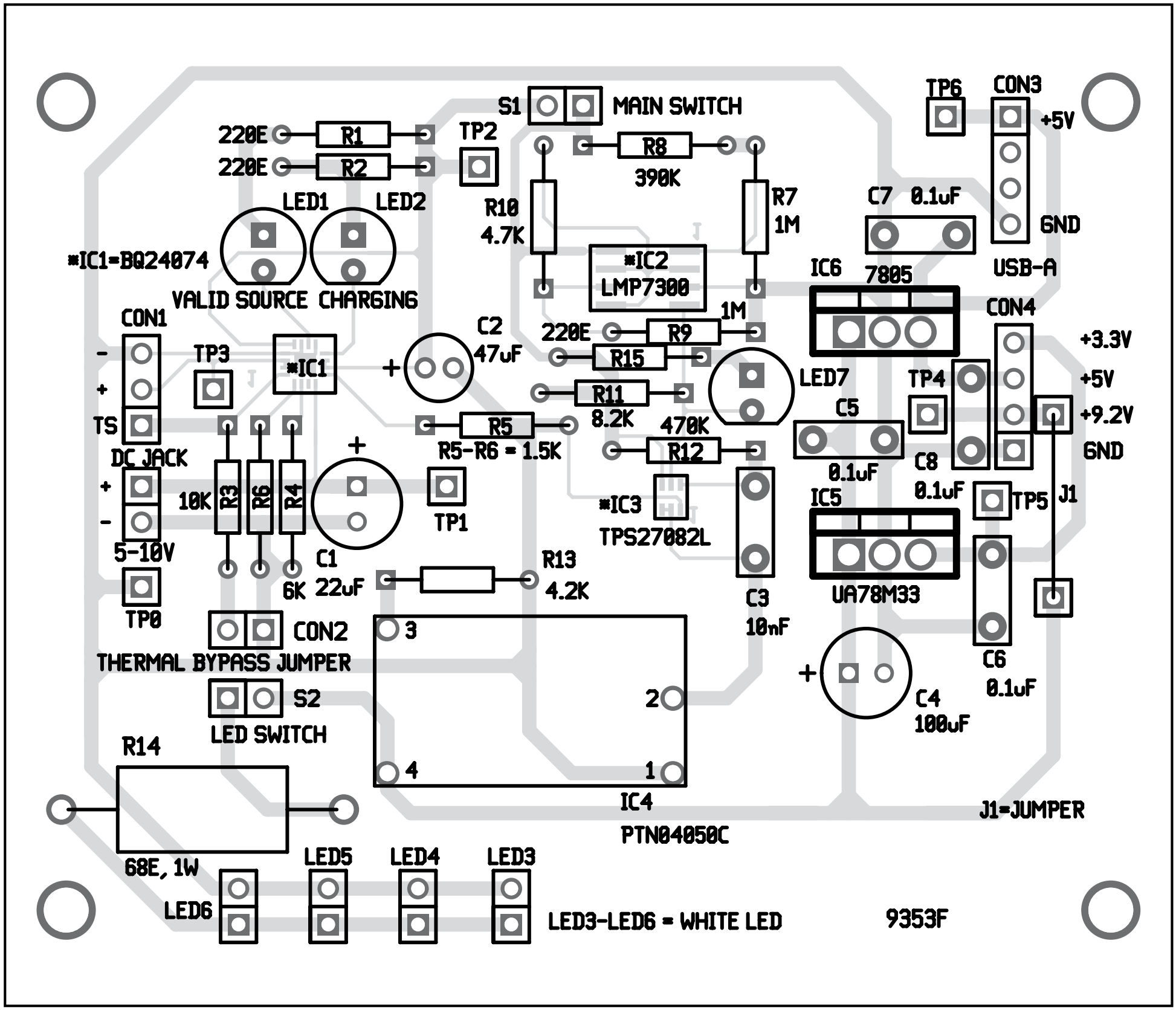

Fig. 5: Component layout for the PCB