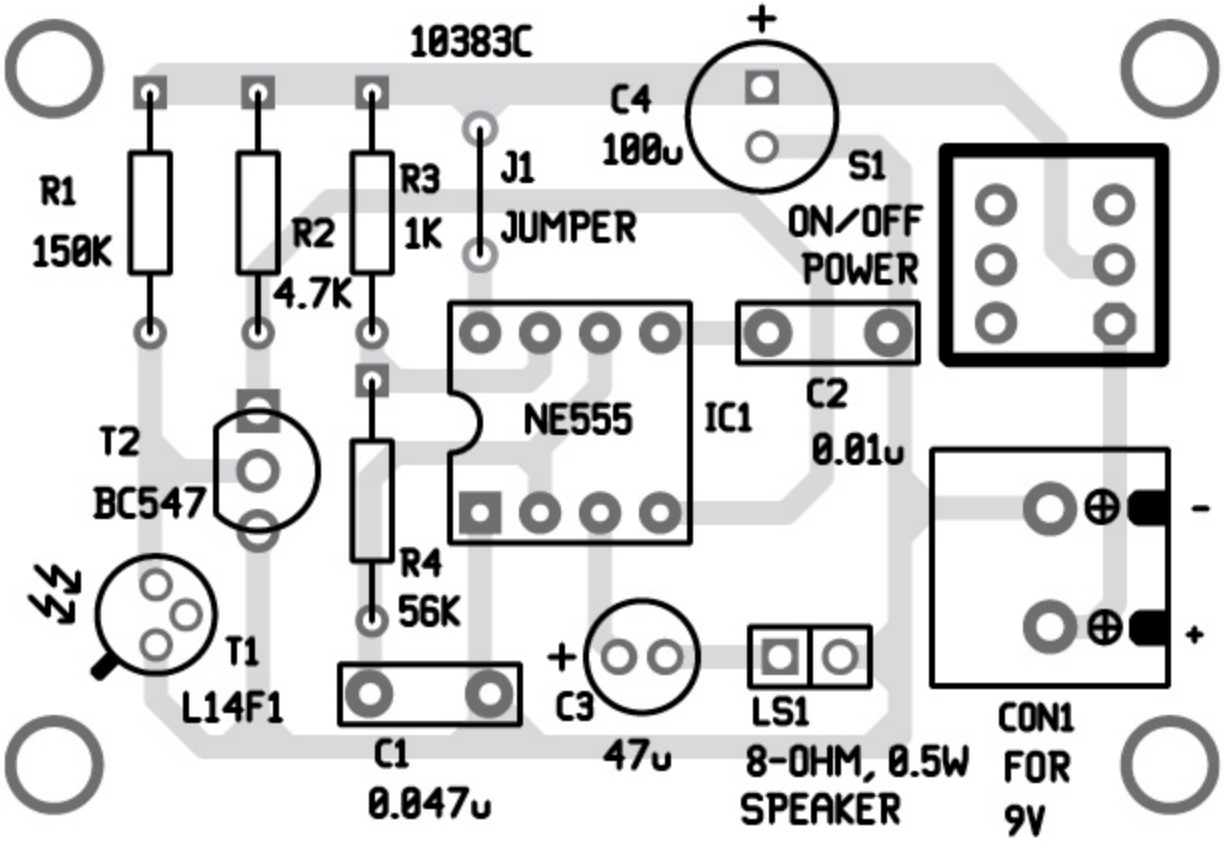
10383C
R1
150K
R2
4.7K
R3
1K
J1
JUMPER
C4
100u
S1
ON/OFF
POWER
NE555
IC1
C2
0.01u
T2
BC547
R4
56K
T1
L14F1
C1
0.047u
C3
47u
LS1
8-OHM, 0.5W
SPEAKER
CON1
FOR
9V