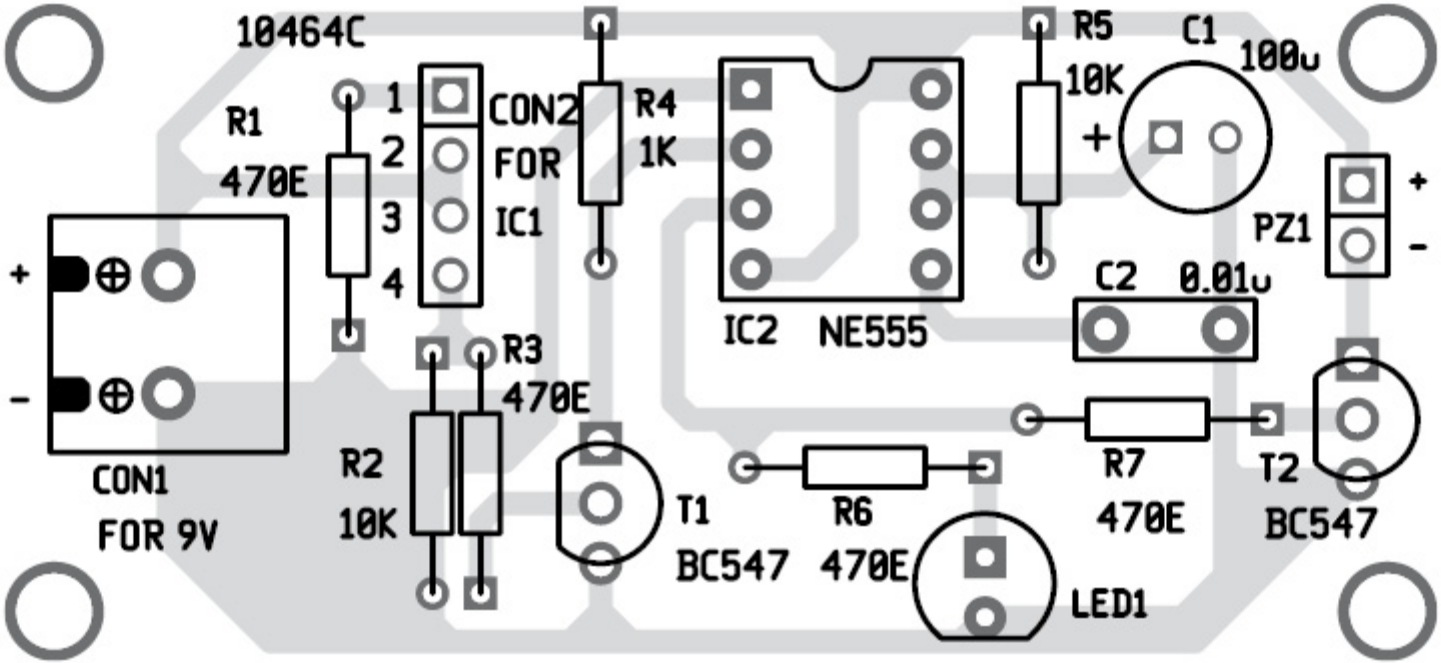
10464C
R1
470E
1
2
3
4
CON2
FOR
IC1
R4
1K
IC2
NE555
R5
10K
C1
100u
+
PZ1
+
-
C2
0.01u
+
-
CON1
FOR 9V
R2
10K
R3
470E
T1
BC547
R6
470E
LED1
R7
470E
T2
BC547