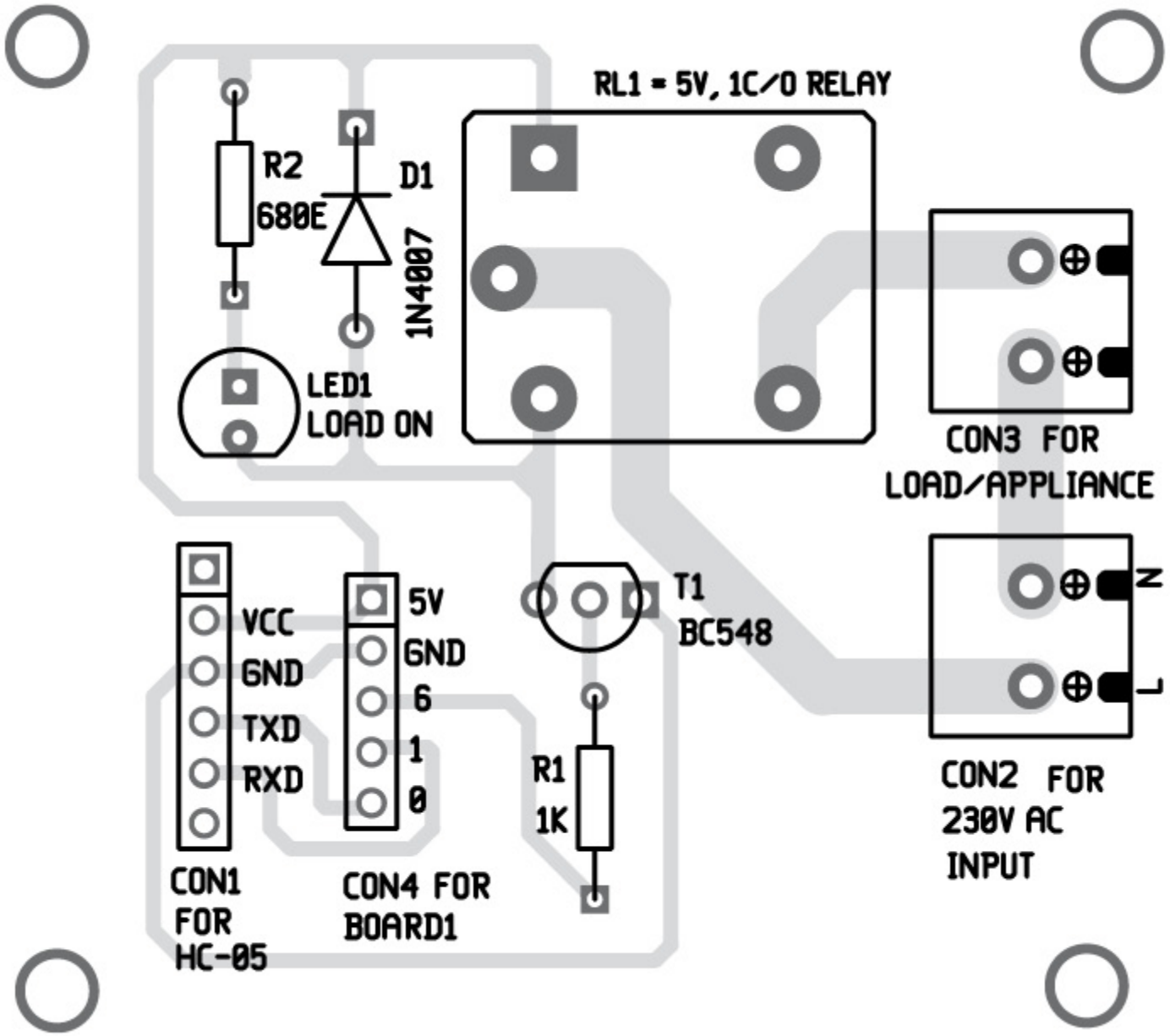
RL1 = 5V, 1C/O RELAY
R2
680E
D1
1N4007
LED1
LOAD ON
CON3 FOR
LOAD/APPLIANCE
N
L
CON2 FOR
230V AC
INPUT
T1
BC548
R1
1K
VCC
GND
TXD
RXD
CON1
FOR
HC-05
5V
GND
6
1
0
CON4 FOR
BOARD1