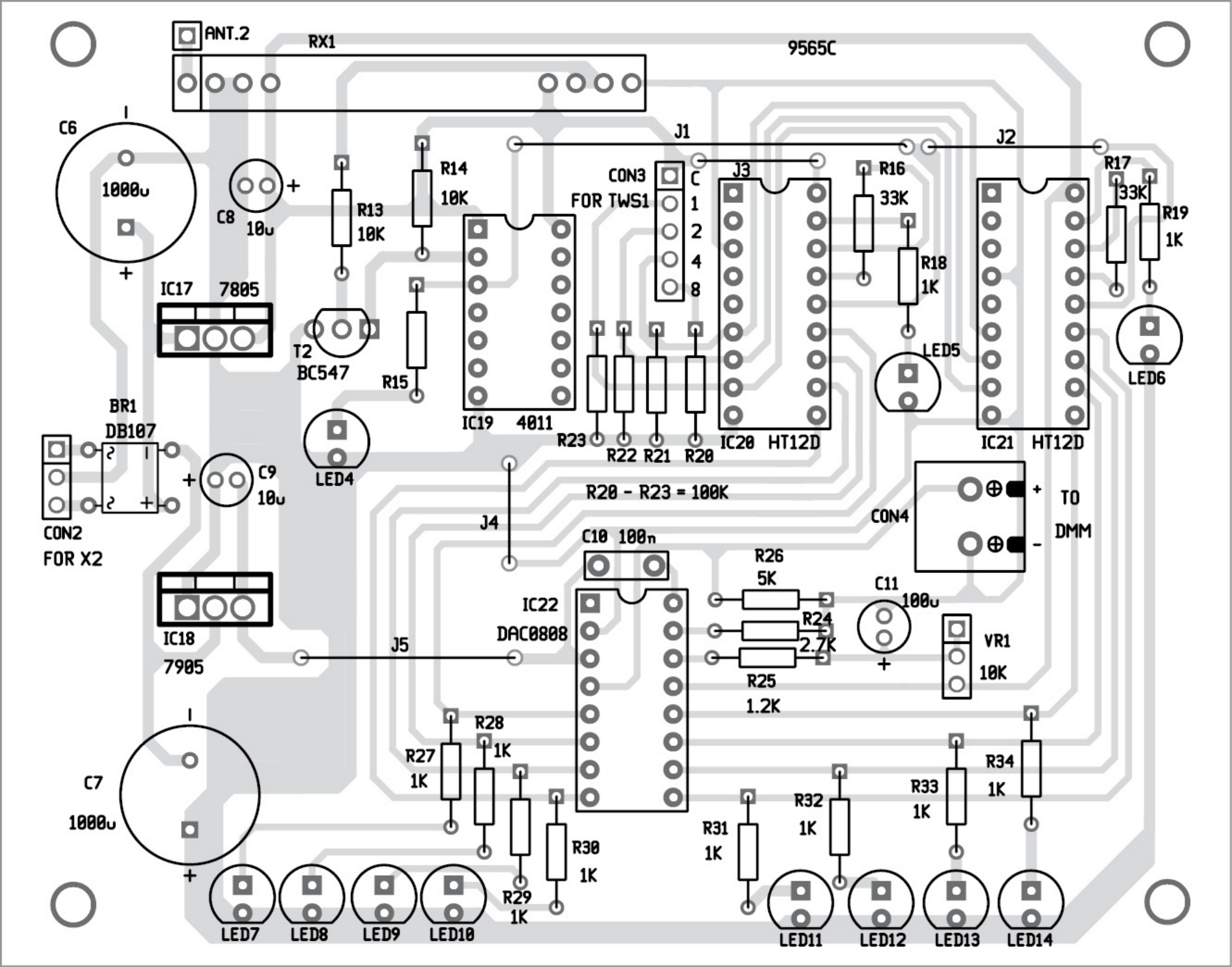
ANT.2
RX1
9565C
C6
1000u
C8
10u
R13
10K
R14
10K
J1
J2
CON3
FOR TWS1
C
1
2
4
8
J3
R16
33K
R17
33K
R19
1K
R18
1K
IC17
7805
T2
BC547
R15
IC19
4011
R23
R22
R21
R20
IC20
HT12D
LED5
IC21
HT12D
LED6
BR1
DB107
C9
10u
LED4
CON2
FOR X2
R20 - R23 = 100K
J4
CON4
TO
DMM
C10
100n
R26
5K
C11
100u
IC22
DAC0808
R24
2.7K
VR1
10K
IC18
7905
J5
R25
1.2K
C7
1000u
R28
1K
R27
1K
R29
1K
R30
1K
R31
1K
R32
1K
R33
1K
R34
1K
LED7
LED8
LED9
LED10
LED11
LED12
LED13
LED14