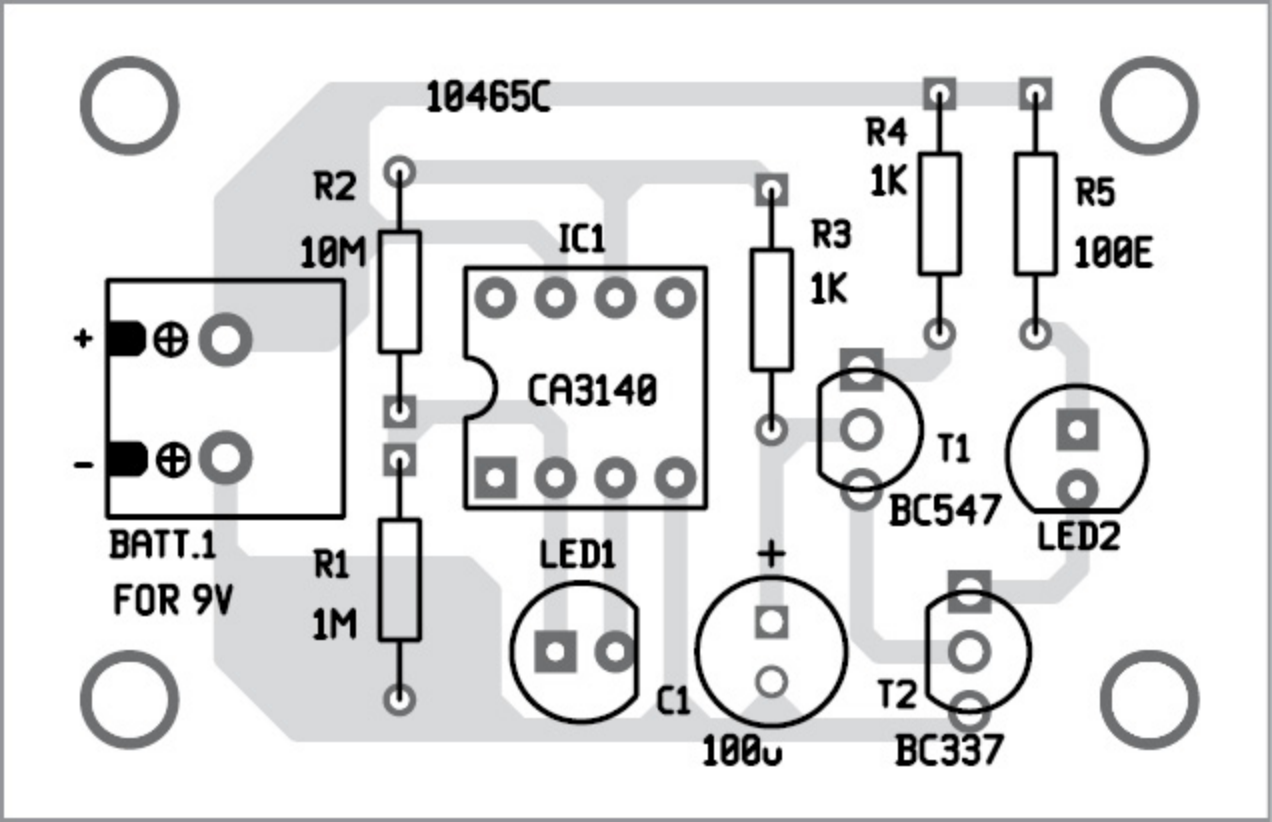
10465C
R2
10M
IC1
R3
1K
R4
1K
R5
100E
+
-
CA3140
T1
BC547
LED2
BATT.1
FOR 9V
R1
1M
LED1
+
C1
100u
T2
BC337