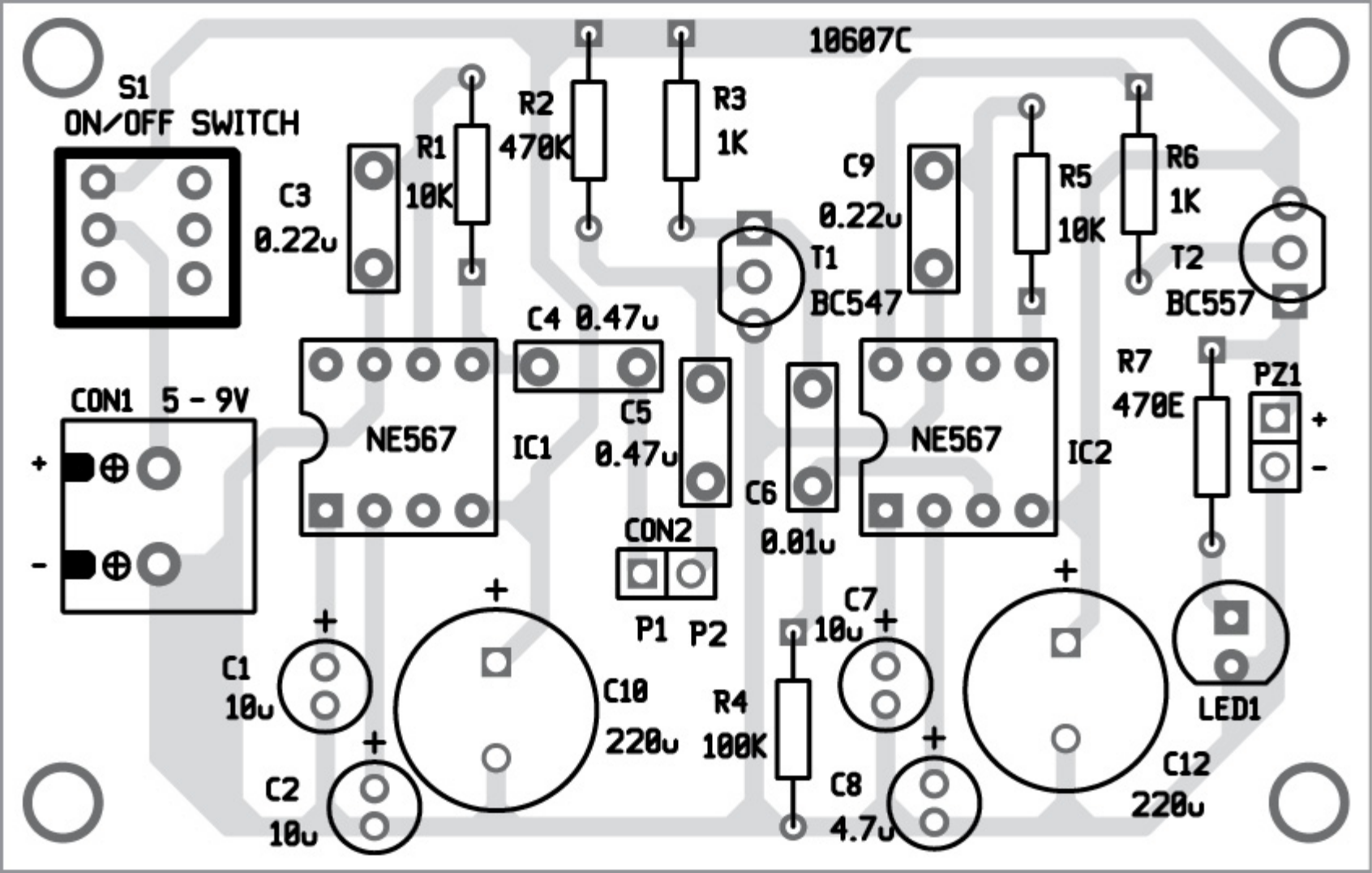
10607C
S1
ON/OFF SWITCH
R1
10K
R2
470K
R3
1K
C3
0.22u
C9
0.22u
R5
10K
R6
1K
T1
BC547
T2
BC557
C4 0.47u
CON1 5 - 9V
+
-
NE567
IC1
C5
0.47u
C6
0.01u
NE567
IC2
R7
470E
PZ1
+
-
CON2
P1 P2
C1
10u
C2
10u
C10
220u
R4
100K
C7
10u
C8
4.7u
C12
220u
LED1