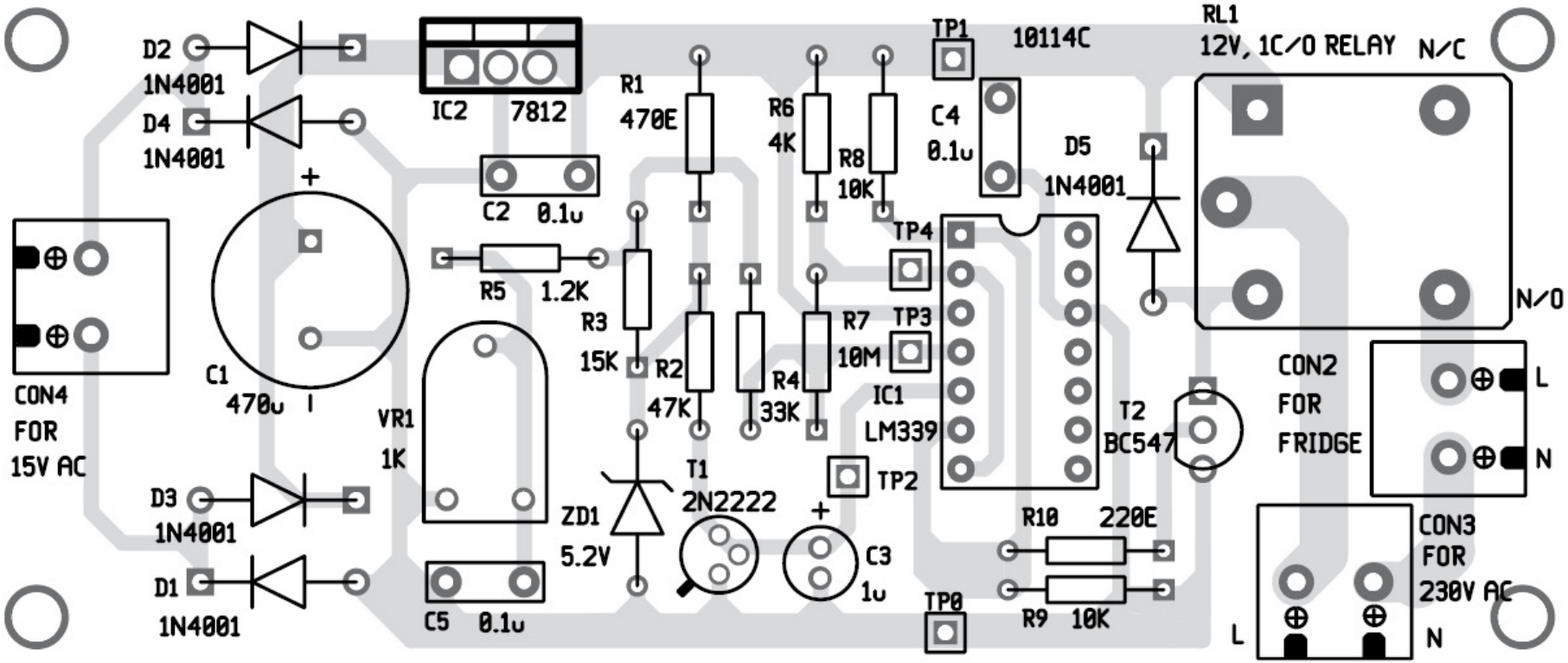
D2
1N4001
D4
1N4001
IC2
7812
R1
470E
R6
4K
R8
10K
TP1
10114C
C4
0.1u
RL1
12V, 1C/O RELAY
N/C
N/O
D5
1N4001
C2
0.1u
R5
1.2K
R3
15K
R2
47K
R4
33K
R7
10M
TP4
TP3
IC1
LM339
T2
BC547
CON2
FOR
FRIDGE
L
N
CON4
FOR
15V AC
C1
470u
VR1
1K
T1
2N2222
ZD1
5.2V
TP2
C3
1u
R10
220E
R9
10K
TP0
CON3
FOR
230V AC
L
N
D3
1N4001
D1
1N4001
C5
0.1u