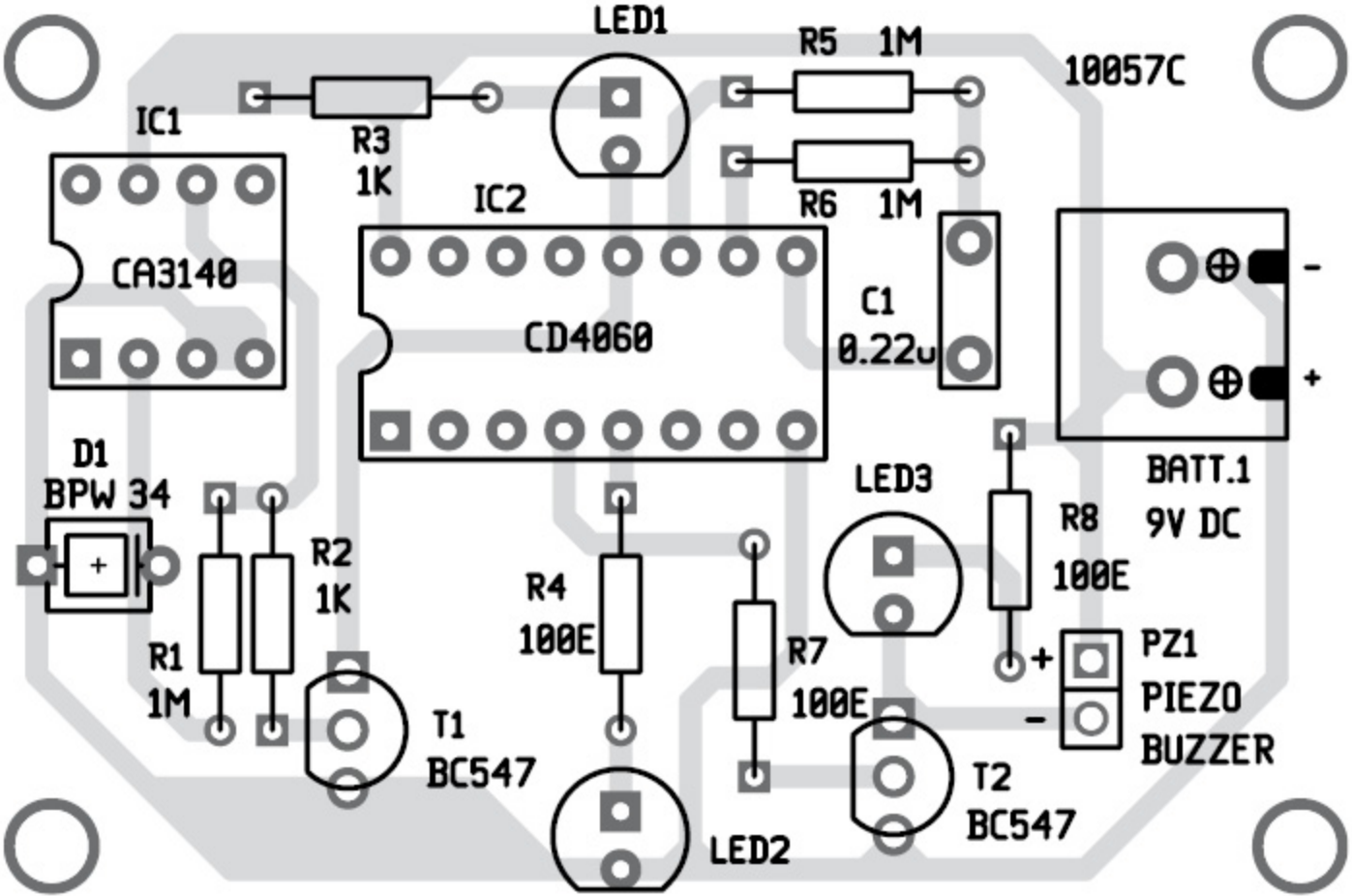
LED1
R5 1M
10057C
IC1
R3
1K
R6 1M
IC2
CA3140
CD4060
C1
0.22u
-
+
D1
BPW 34
BATT.1
9V DC
LED3
R8
100E
R2
1K
R4
100E
R7
100E
PZ1
PIEZO
BUZZER
R1
1M
T1
BC547
T2
BC547
LED2