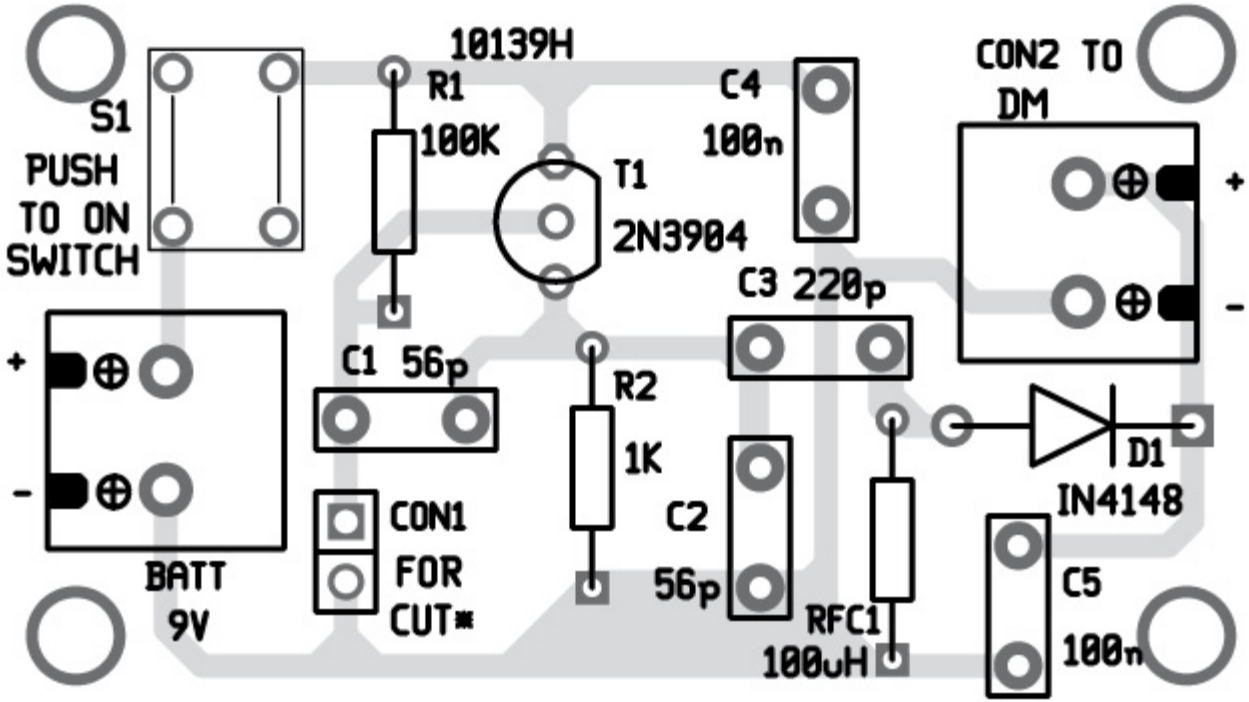
10139H
R1
100K
S1
PUSH
TO ON
SWITCH
T1
2N3904
C4
100n
CON2 TO
DM
+
-
C3 220p
C1 56p
R2
1K
+
-
BATT
9V
CON1
FOR
CUT*
C2
56p
RFC1
100uH
D1
IN4148
C5
100n