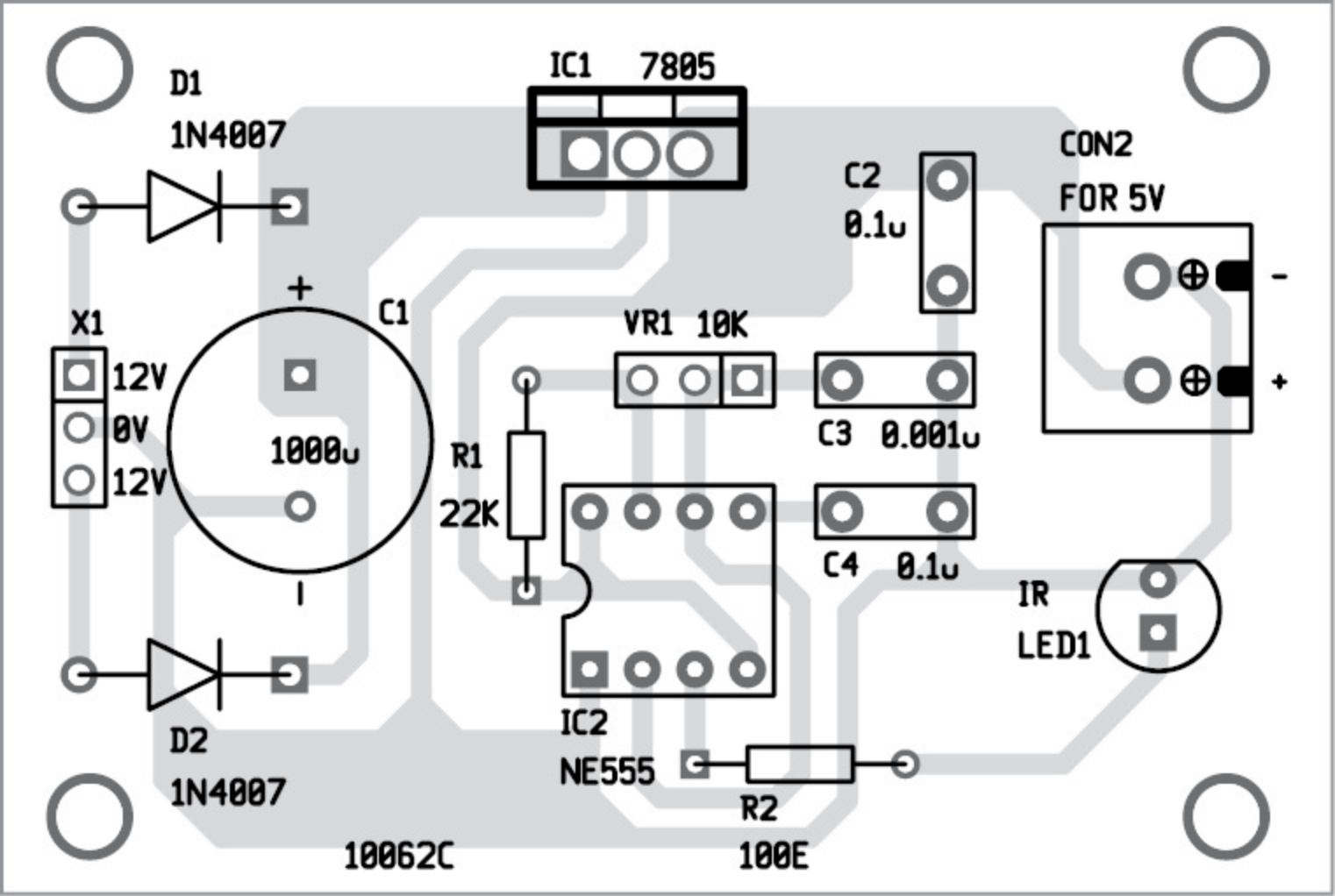
D1
1N4007
IC1
7805
C2
0.1u
CON2
FOR 5V
-
+
X1
12V
0V
12V
+
C1
1000u
-
VR1
10K
C3
0.001u
R1
22K
C4
0.1u
IR
LED1
D2
1N4007
IC2
NE555
R2
100E
10062C