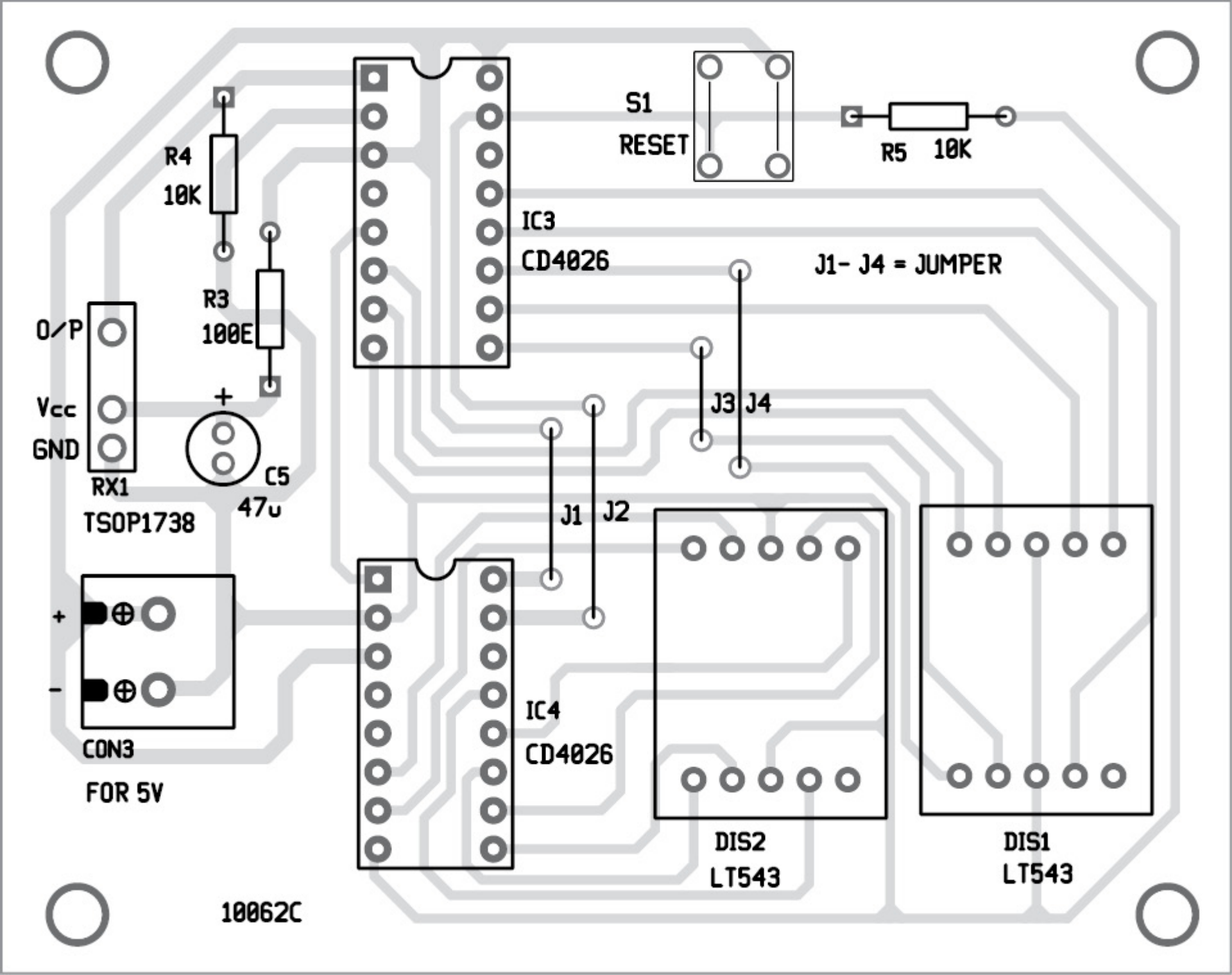
R4
10K
R3
100E
O/P
Vcc
GND
RX1
TSOP1738
+
C5
47u
IC3
CD4026
S1
RESET
R5 10K
J1- J4 = JUMPER
J3 J4
J1 J2
+
-
CON3
FOR 5V
IC4
CD4026
DIS2
LT543
DIS1
LT543
10062C