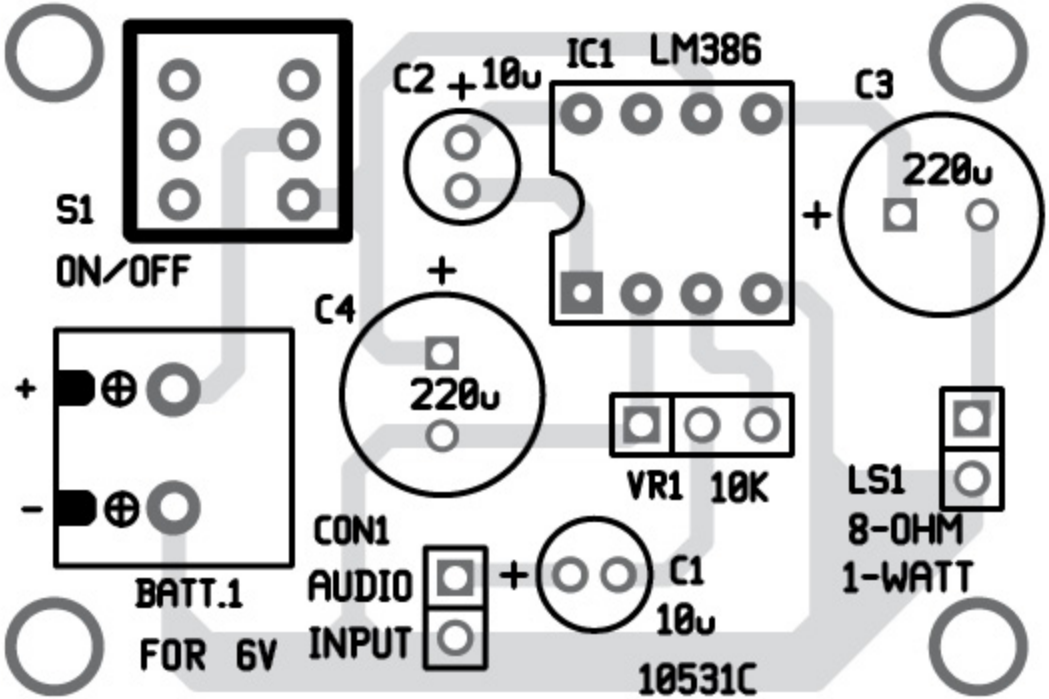
S1
ON/OFF
C2
10u
IC1
LM386
C3
220u
C4
220u
+
-
BATT.1
FOR 6V
VR1
10K
LS1
8-OHM
1-WATT
CON1
AUDIO
INPUT
C1
10u
10531C