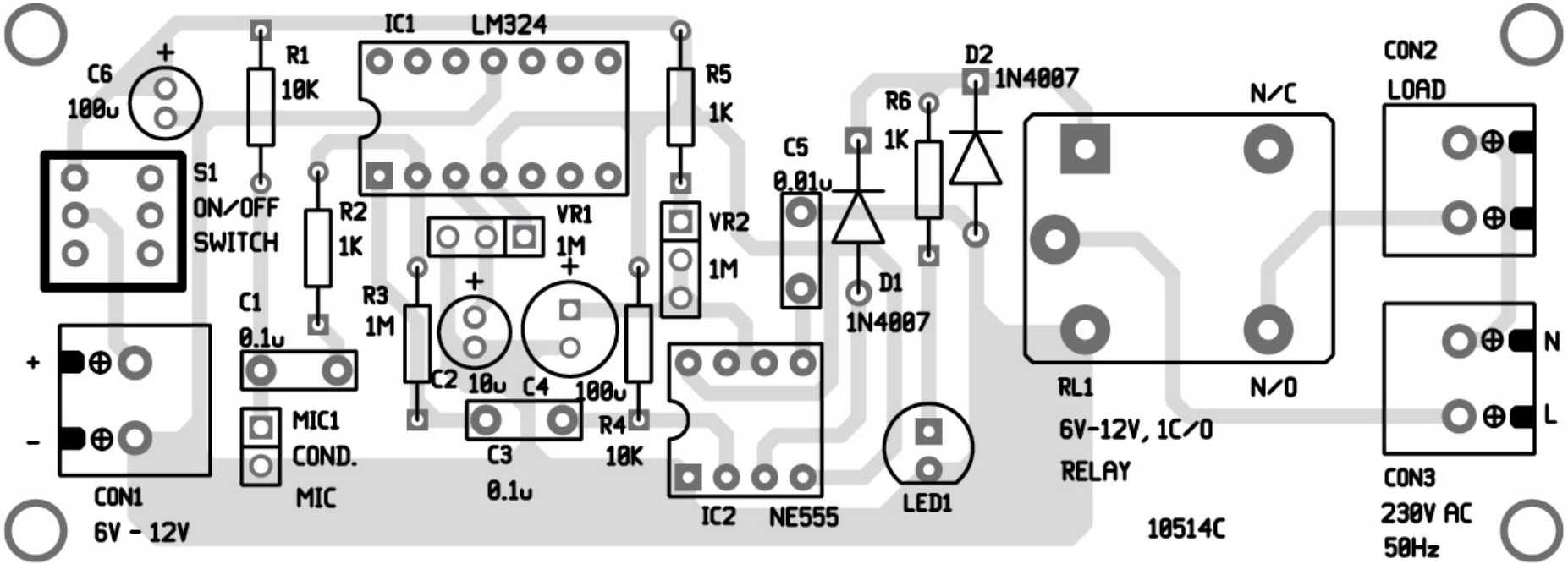
C6
100u
R1
10K
IC1
LM324
R5
1K
D2
1N4007
R6
1K
N/C
CON2
LOAD
S1
ON/OFF
SWITCH
R2
1K
VR1
1M
VR2
1M
C5
0.01u
D1
1N4007
C1
0.1u
R3
1M
C2
10u
C4
100u
C3
0.1u
R4
10K
MIC1
COND.
MIC
CON1
6V - 12V
IC2
NE555
LED1
RL1
N/O
6V-12V, 1C/O
RELAY
10514C
CON3
230V AC
50Hz
N
L