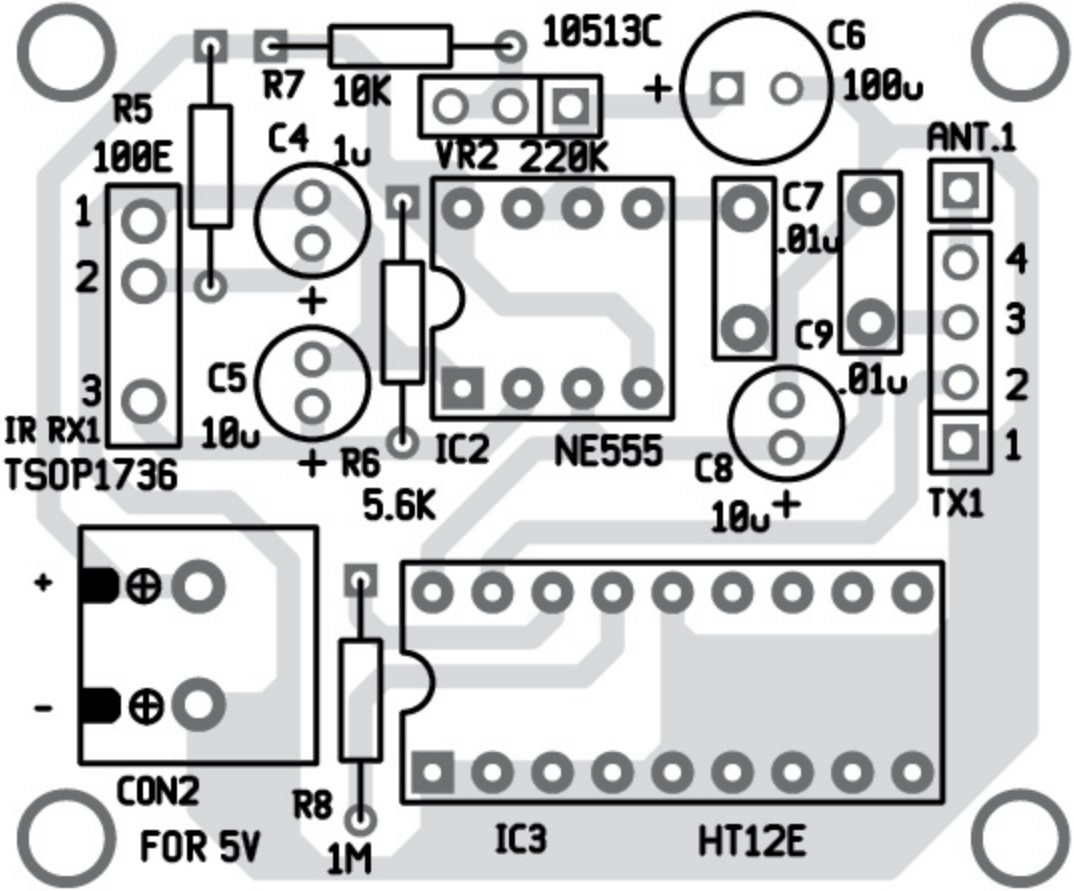
10513C
C6
100u
R7
10K
R5
100E
C4
1u
VR2
220K
ANT.1
1
2
3
4
C7
.01u
C9
.01u
C5
10u
IR RX1
TSOP1736
R6
5.6K
IC2
NE555
C8
10u
TX1
+
-
CON2
FOR 5V
R8
1M
IC3
HT12E