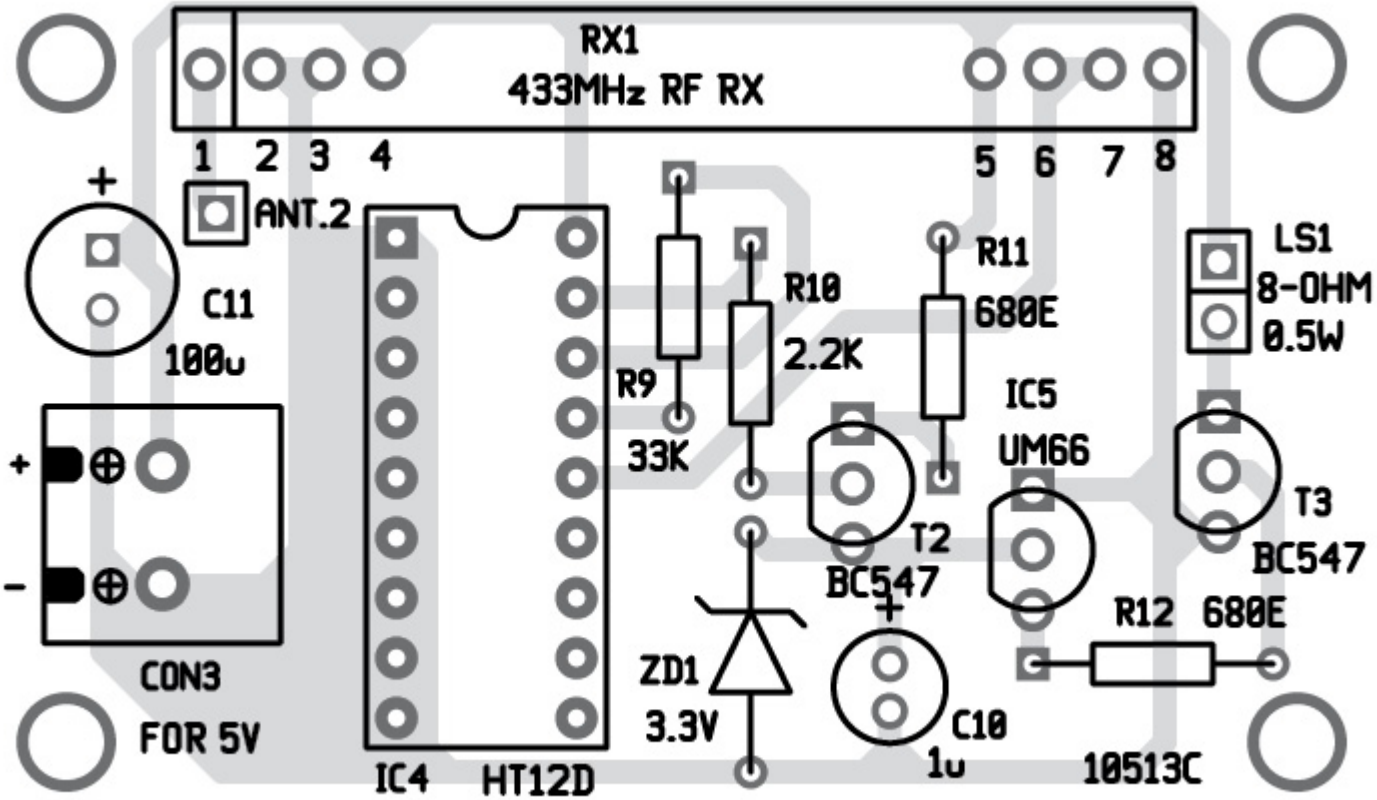
RX1
433MHz RF RX
1 2 3 4
5 6 7 8
ANT.2
C11
100u
CON3
FOR 5V
IC4 HT12D
R9
33K
R10
2.2K
R11
680E
IC5
UM66
T2
BC547
T3
BC547
LS1
8-OHM
0.5W
ZD1
3.3V
C10
1u
R12 680E
10513C