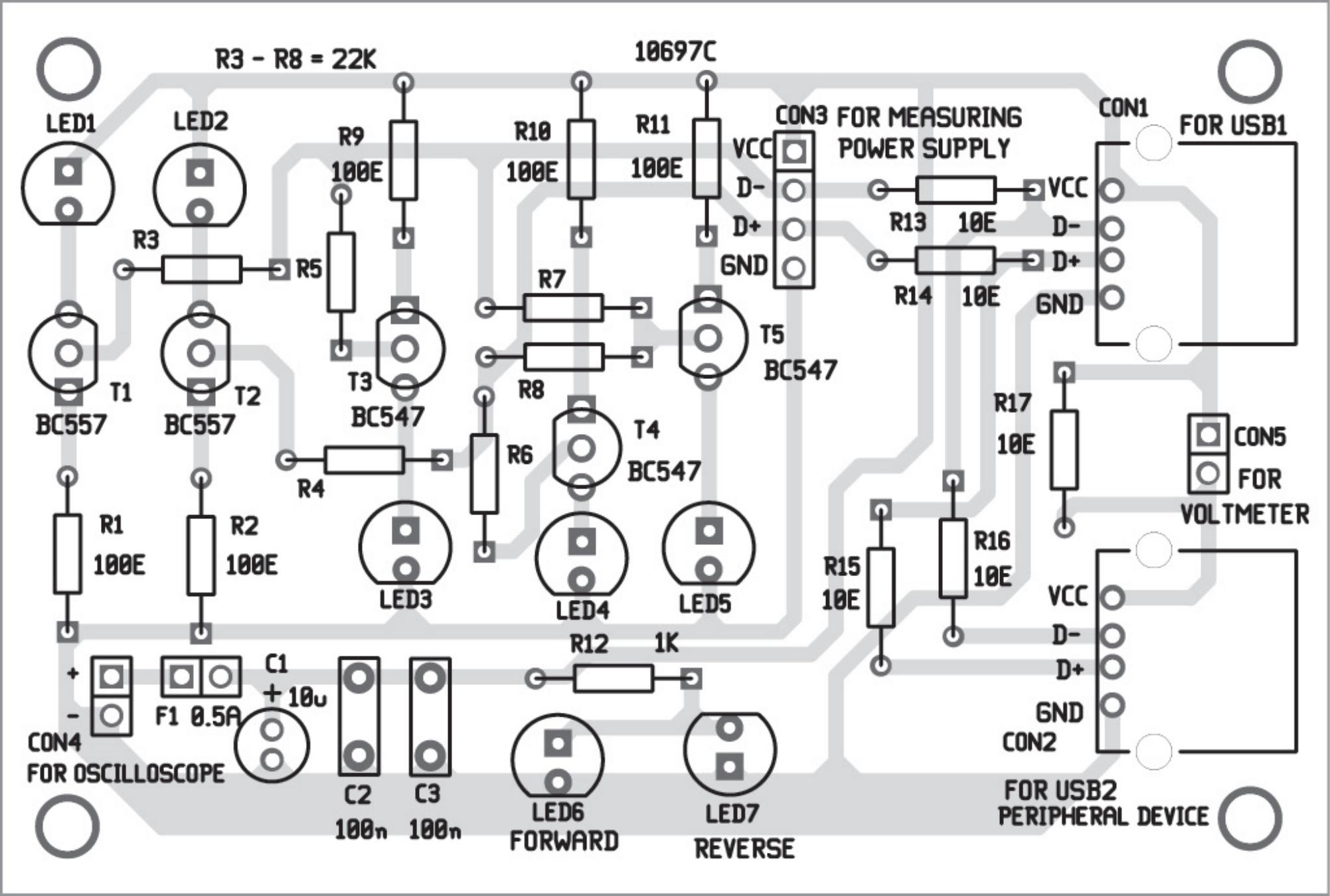
R3 - R8 = 22K
10697C
LED1
LED2
R9
100E
R10
100E
R11
100E
CON3 FOR MEASURING
POWER SUPPLY
VCC
D-
D+
GND
CON1
FOR USB1
VCC
D-
D+
GND
R13 10E
R14 10E
R3
R5
R7
R8
T5
BC547
T1
BC557
T2
BC557
T3
BC547
T4
BC547
R4
R6
R17
10E
CON5
FOR
VOLTMETER
R1
100E
R2
100E
LED3
LED4
LED5
R15
10E
R16
10E
VCC
D-
D+
GND
CON2
FOR USB2
PERIPHERAL DEVICE
R12 1K
+
-
CON4
FOR OSCILLOSCOPE
F1 0.5A
C1
+10u
C2
100n
C3
100n
LED6
FORWARD
LED7
REVERSE