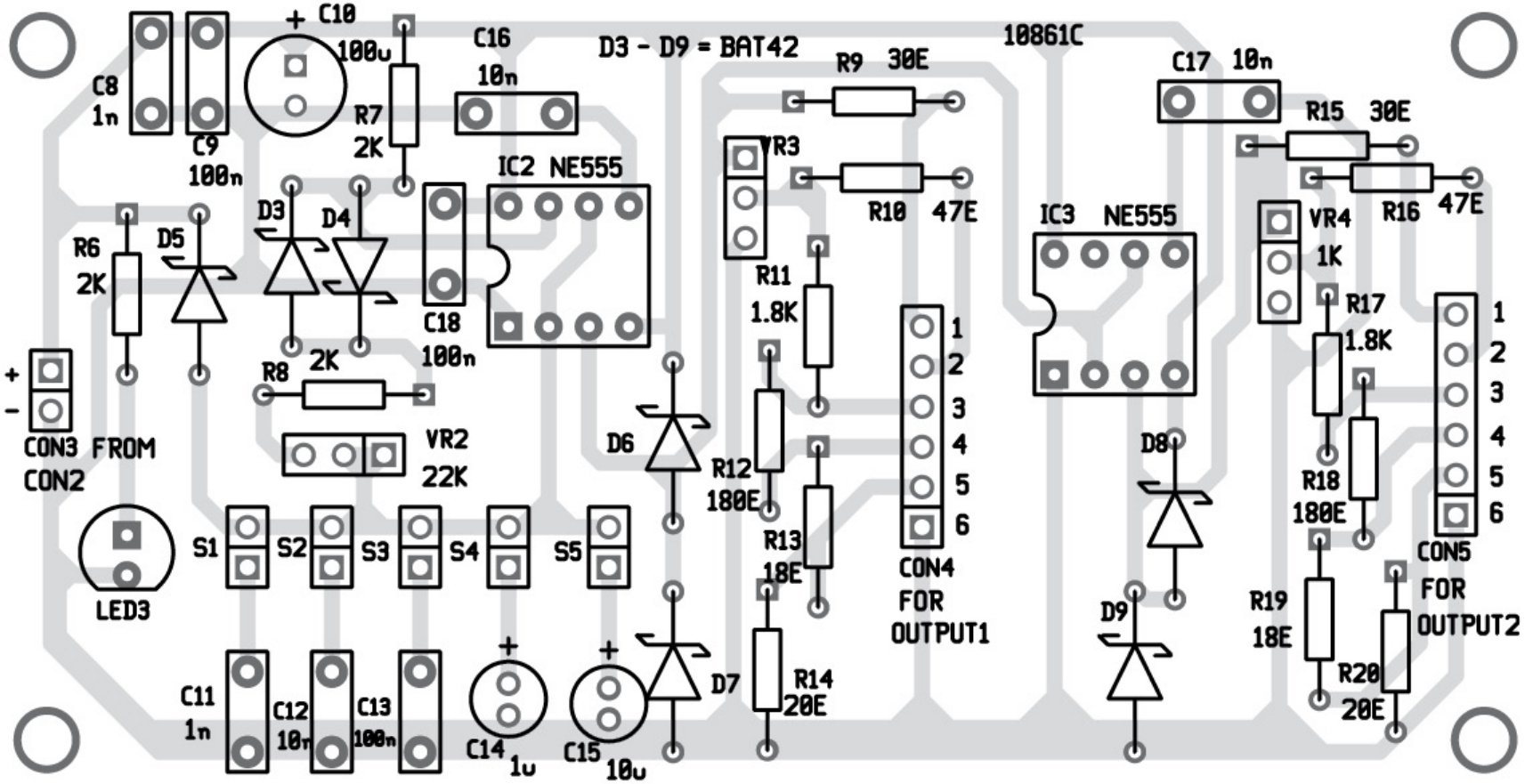
C8
1n
C9
100n
+ C10
100u
R7
2K
C16
10n
D3 - D9 = BAT42
10861C
R9 30E
C17 10n
R15 30E
VR3
R10 47E
R16 47E
IC2 NE555
IC3 NE555
VR4
1K
R6
2K
D5
D3
D4
C18
100n
R11
1.8K
R17
1.8K
R8 2K
VR2
22K
D6
R12
180E
R13
18E
R14
20E
CON4
FOR
OUTPUT1
D8
D9
R18
180E
R19
18E
R20
20E
CON5
FOR
OUTPUT2
CON3 FROM
CON2
LED3
S1
S2
S3
S4
S5
C11
1n
C12
10n
C13
100n
C14
1u
C15
10u
D7