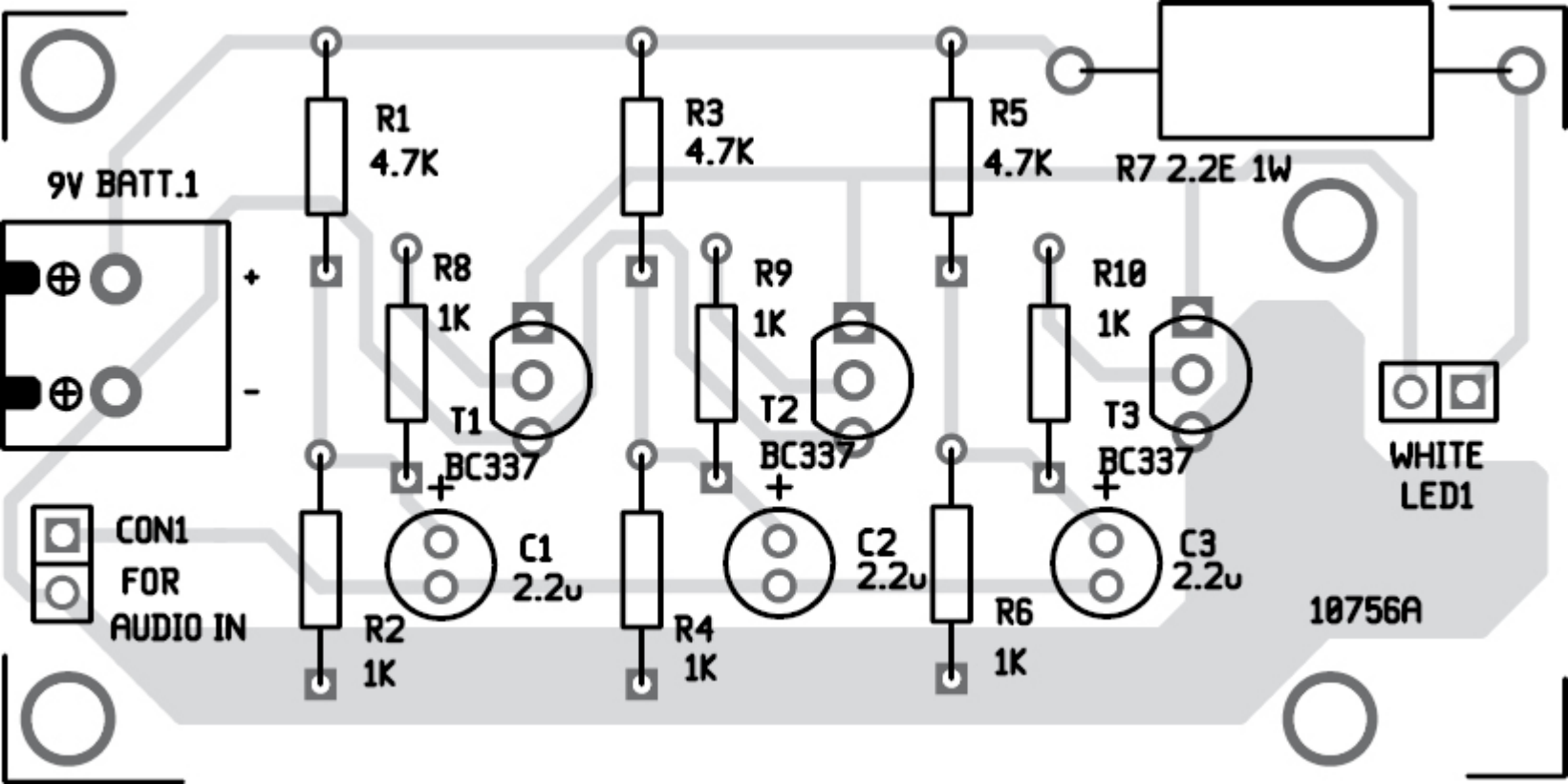
R1
4.7K
R3
4.7K
R5
4.7K
R7 2.2E 1W
9V BATT.1
+
-
R8
1K
R9
1K
R10
1K
T1
BC337
T2
BC337
T3
BC337
WHITE
LED1
CON1
FOR
AUDIO IN
C1
2.2u
C2
2.2u
C3
2.2u
R2
1K
R4
1K
R6
1K
10756A