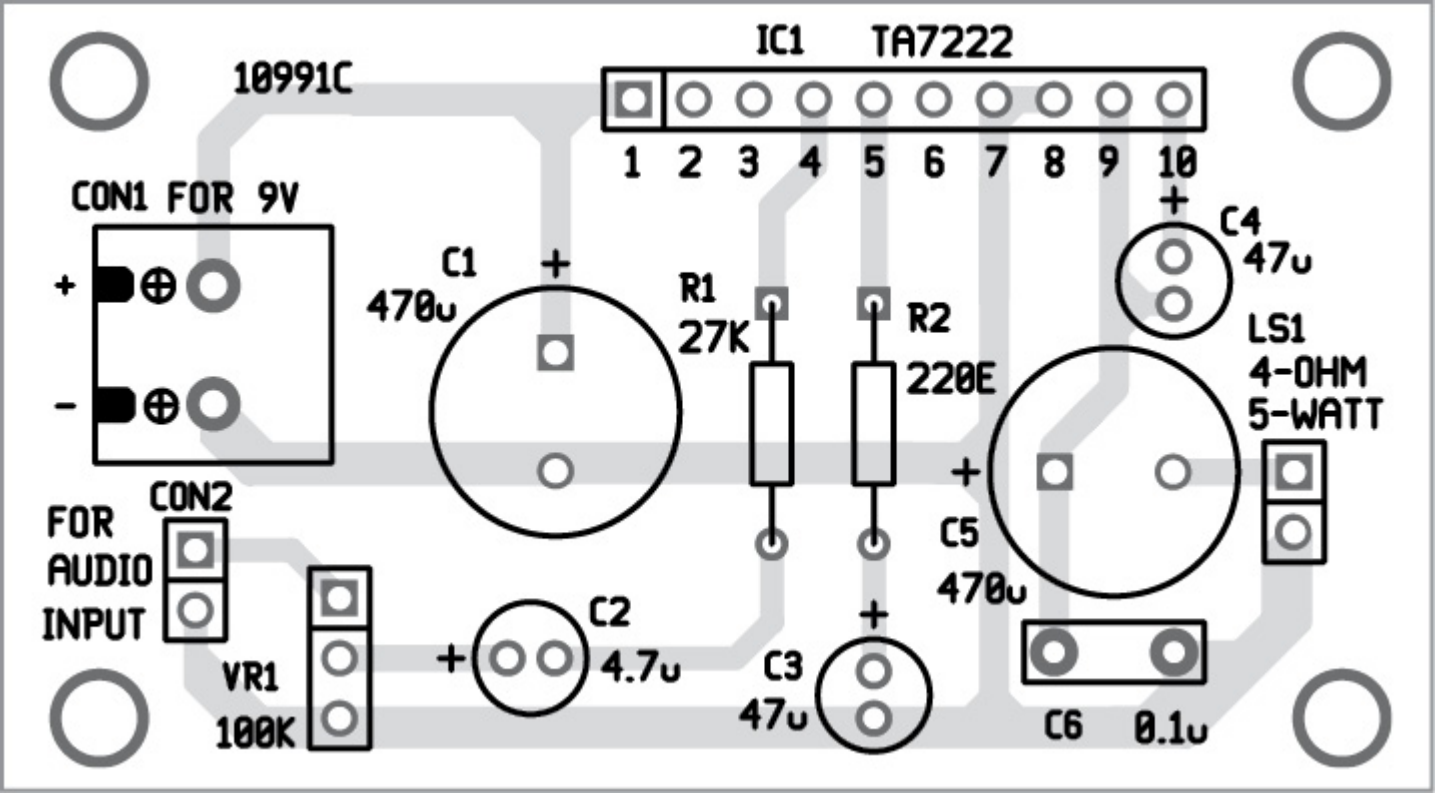
10991C
IC1 TA7222
1 2 3 4 5 6 7 8 9 10
CON1 FOR 9V
+
-
C1
470u
R1
27K
R2
220E
C4
47u
LS1
4-OHM
5-WATT
C5
470u
CON2
FOR
AUDIO
INPUT
VR1
100K
C2
4.7u
C3
47u
C6
0.1u