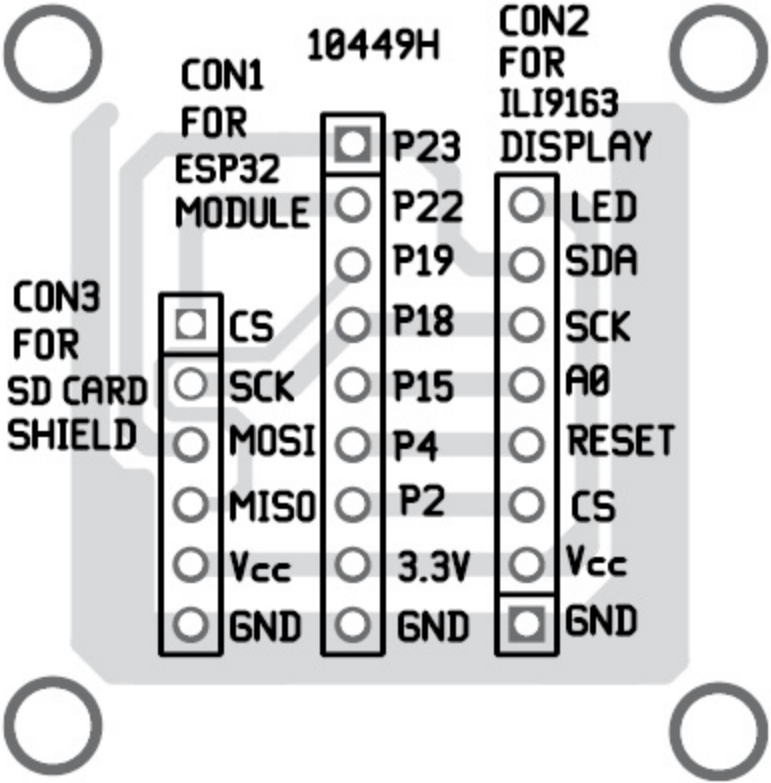
10449H
CON1
FOR
ESP32
MODULE
CON2
FOR
ILI9163
DISPLAY
CON3
FOR
SD CARD
SHIELD
CS
SCK
MOSI
MISO
Vcc
GND
P23
P22
P19
P18
P15
P4
P2
3.3V
GND
LED
SDA
SCK
A0
RESET
CS
Vcc
GND