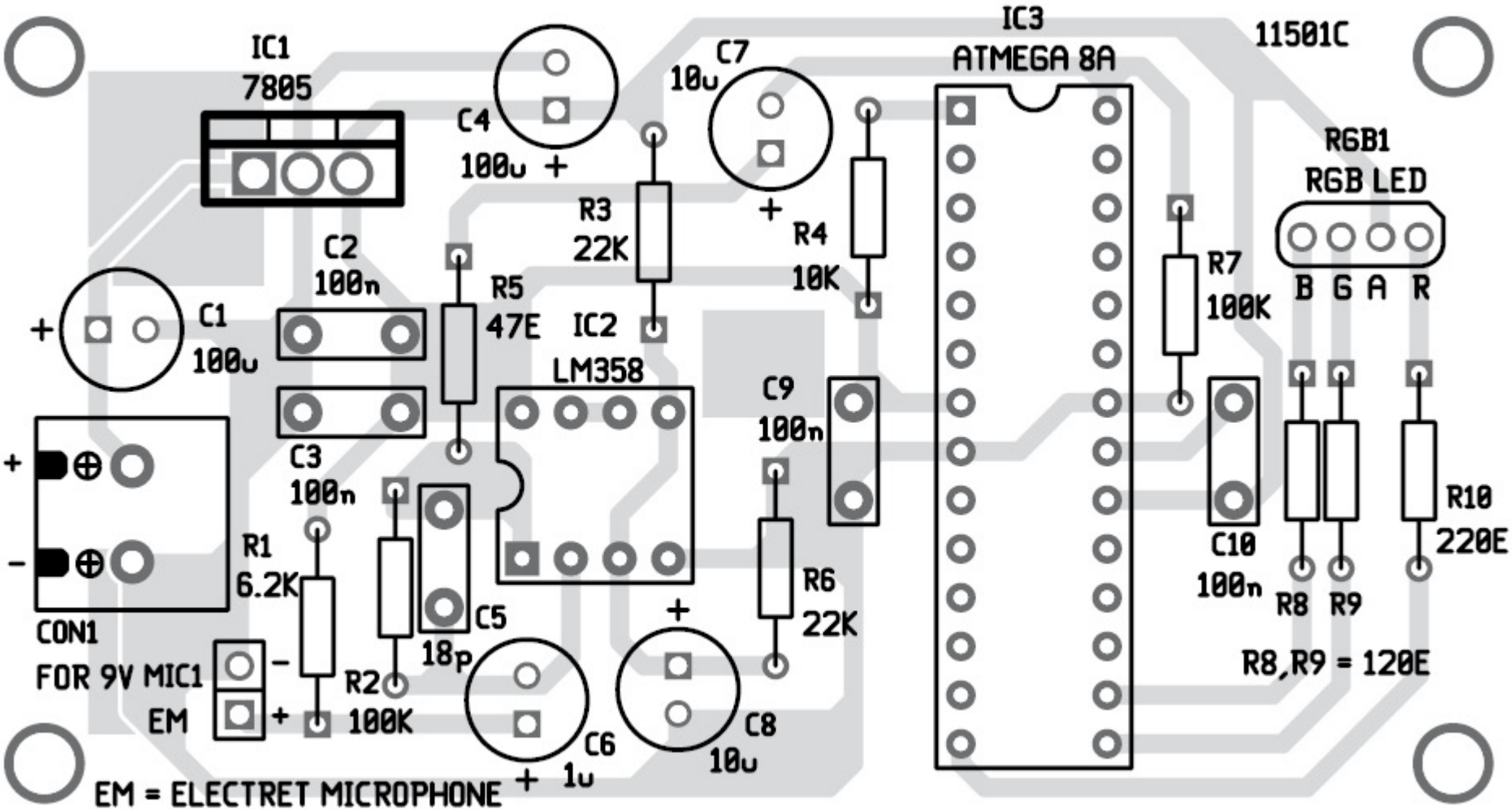
IC1
7805
C4
100u
C7
10u
IC3
ATMEGA 8A
11501C
RGB1
RGB LED
B G A R
R3
22K
R4
10K
C2
100n
R5
47E
IC2
LM358
R7
100K
C1
100u
C9
100n
C3
100n
R10
220E
C10
100n
R8 R9
R1
6.2K
R6
22K
C5
18p
CON1
FOR 9V MIC1
EM
R2
100K
C6
1u
C8
10u
R8,R9 = 120E
EM = ELECTRET MICROPHONE