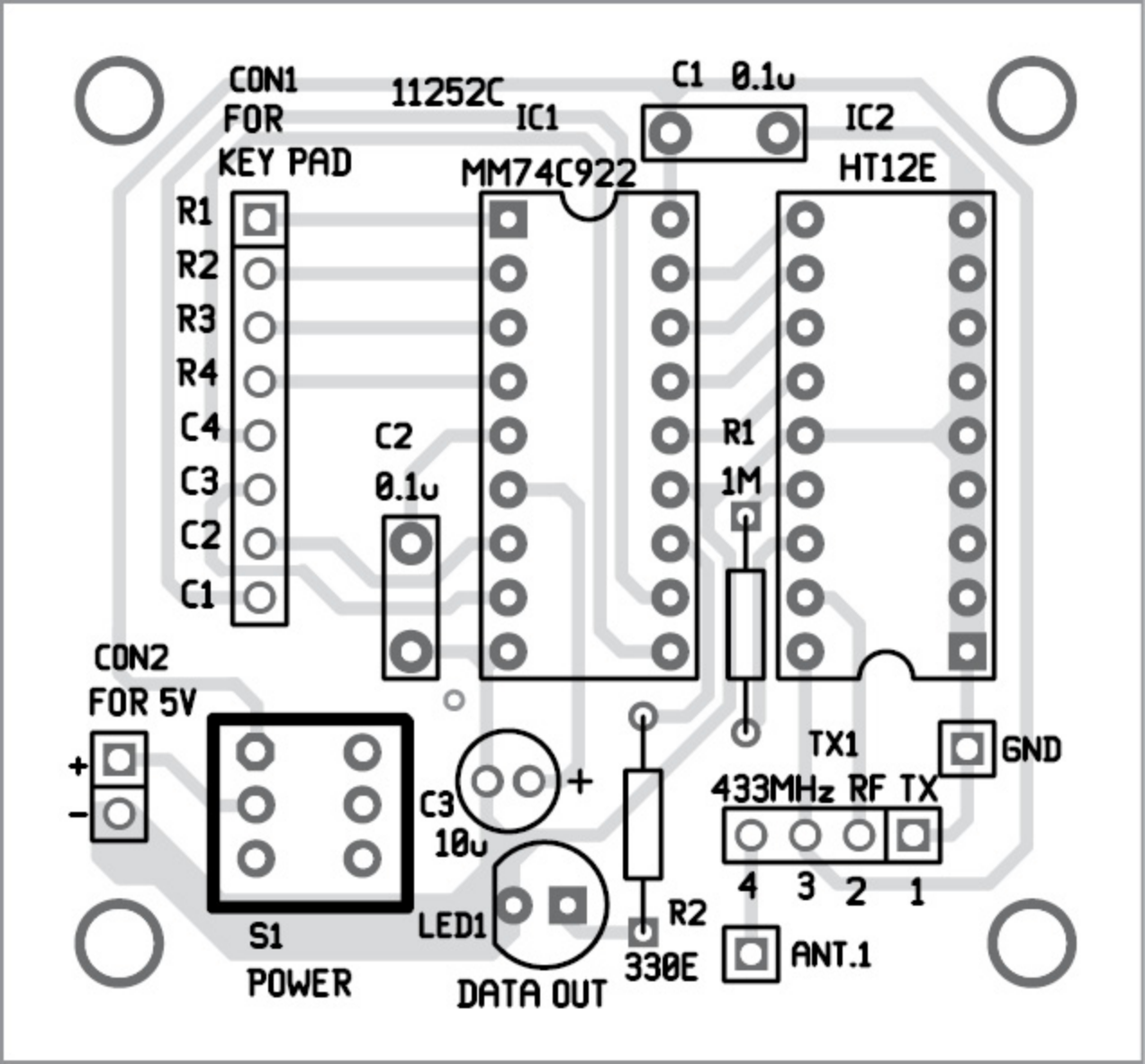
CON1
FOR
KEY PAD
R1
R2
R3
R4
C4
C3
C2
C1
11252C
IC1
MM74C922
C1 0.1u
IC2
HT12E
C2
0.1u
R1
1M
CON2
FOR 5V
+
-
S1
POWER
C3
10u
+
LED1
DATA OUT
R2
330E
TX1
433MHz RF TX
4 3 2 1
GND
ANT.1