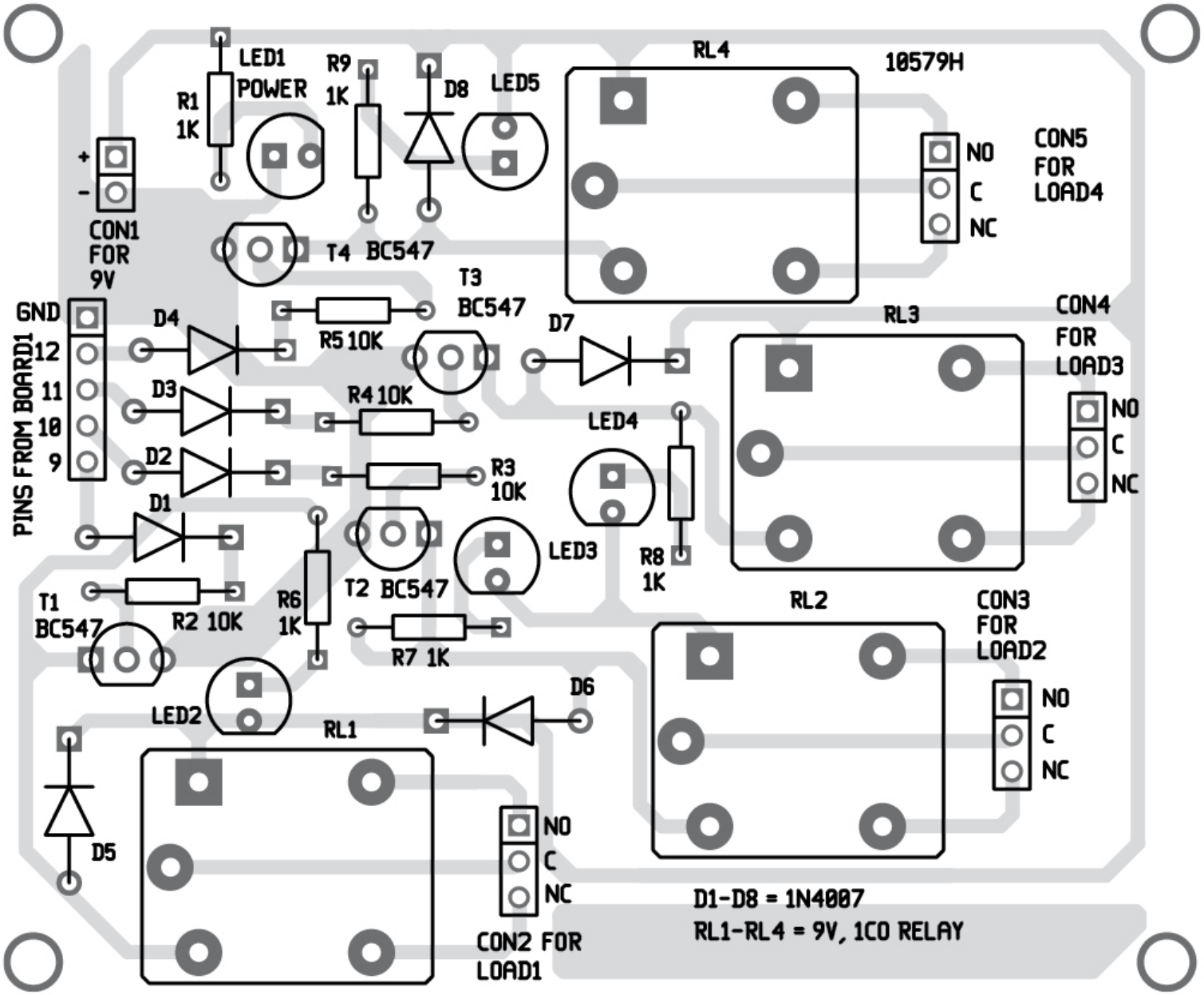
LED1
POWER
R1
1K
R9
1K
D8
LED5
RL4
10579H
CON5
FOR
LOAD4
NO
C
NC
+
-
CON1
FOR
9V
T4 BC547
T3
BC547
GND
12
11
10
9
PINS FROM BOARD1
D4
R5 10K
D7
RL3
CON4
FOR
LOAD3
D3
R4 10K
LED4
D2
R3
10K
D1
LED3
R8
1K
T1
BC547
R2 10K
R6
1K
T2 BC547
R7 1K
RL2
CON3
FOR
LOAD2
LED2
D6
RL1
D5
CON2 FOR
LOAD1
D1-D8 = 1N4007
RL1-RL4 = 9V, 1CO RELAY